ASSEMBLY DRAWING FOR AQUA STAINLESS STEEL 'STD' DUO BENCH

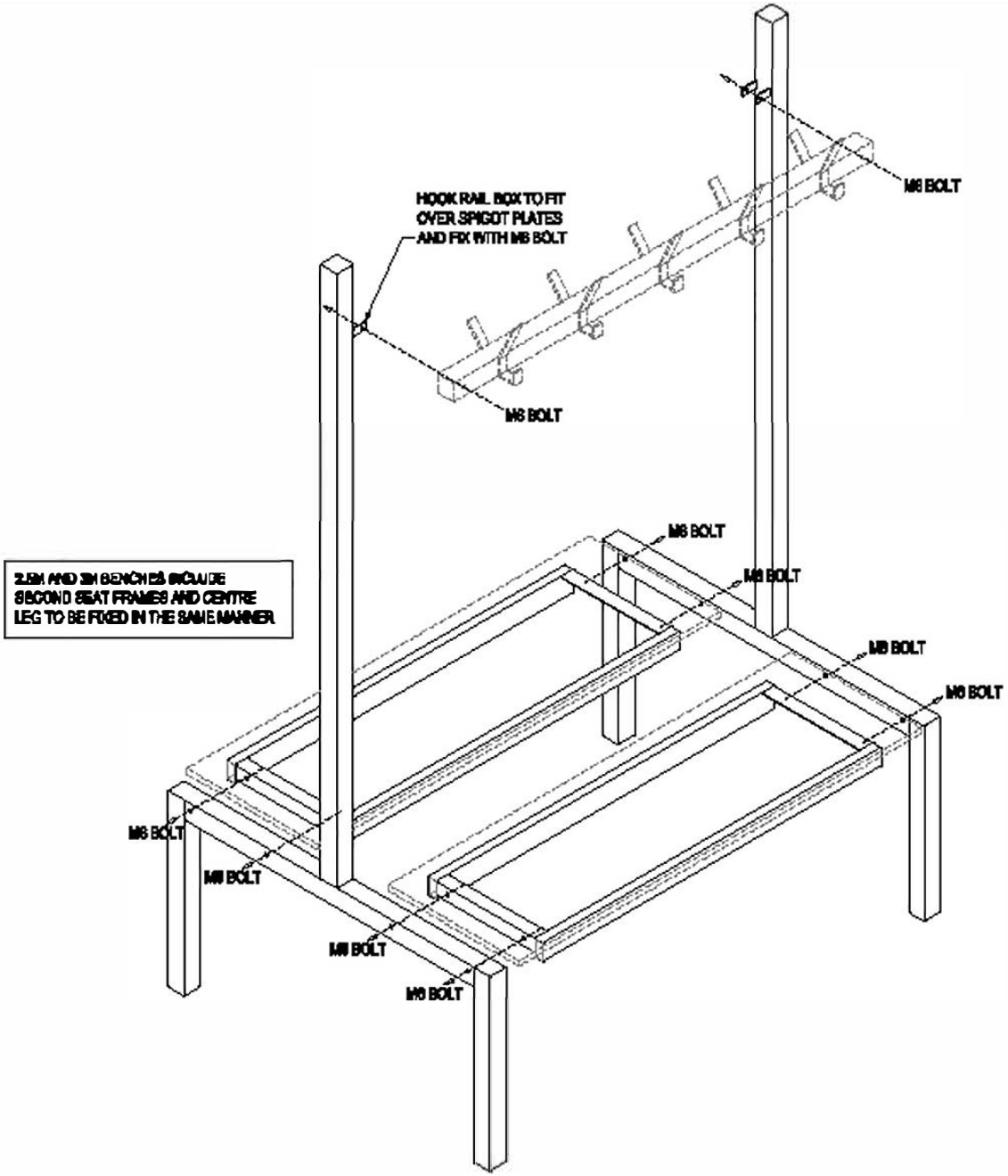

© COPYRIGHT ESE Direct Ltd
No unauthorised disclosure, reproduction or manufacture of details or product permitted without prior written consent.

Benchura

Wensum Works, 150 Northumberland Street, Norwich,
NR2 4EE Tel: (01603) 629959 Fax: (01603) 630113